KISAE Battery Charger

TECHNICAL SPECIFICATIONS

AC1240

12V Series
AC - DC 40A Charger



Product features

- Smart, multi-stage charging ensures batteries are charged to battery manufacturer's recommendations.
- Microprocessor controlled charging algorithm (Bulk, Absorption, Float) for Gel, Program, AGM Lithium, and Flooded batteries with equalization.
- 3-bank charging capability allows you to decide charge priority and the ability to charge different battery chemistries simultaneously.
- Selectable battery type.

System diagram

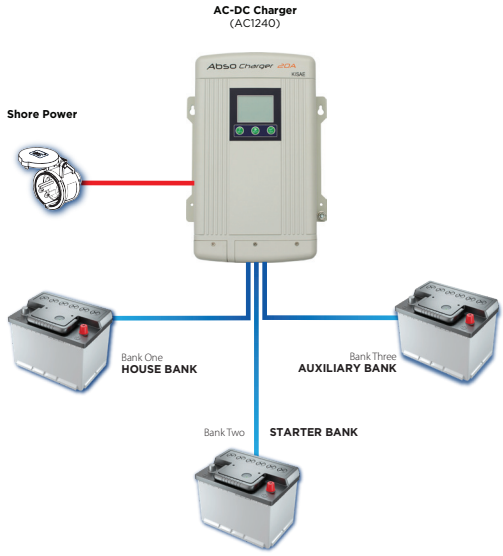

Product dimensions

Length: 11.6", Width: 8.1", Height: 3.4" (295mm x 206mm x 86mm)

Terminal Connections



USA / CAN HARDWIRE

Specifications subject to change without notice.

kisaepower.com

KISAE Battery Charger

KISAE

AC1240

12V Series
AC - DC 40A Charger

Output Rating

Output Current (Maximum)	40A
Output Voltage	12V

DC Output

Selectable Battery Type	Gel, AGM, Flooded, Lithium, Program
Charge	14.2 - 15.5V
Float	13.4 - 13.8V
Equalize (Flooded Battery Only)	16.0V
Charging Control	3 Stages / 2-Stages, Program
DC Output Bank	Three
Parasitic Current	< 2mA

AC Input

Voltage (Nominal)	120, 230, 240VAC
Operation Range	90 - 265VAC
Frequency Range	47 - 63Hz
Power Consumption (full load)	700W
Power Factor Correction	Yes

Protection Features

Reverse Battery	Yes (shutdown), Auto Reset
Cooling	Force Air Ventilation
Output Short Circuit	Yes
Ingress Protection	IP32 (optional Battery Temperature Sensor use)

Display Panel

Indicator	LCD display with back lighting
Digital Display	Voltage, Current, Status, Error Code

Enclosure

AC Input Connection	Hardwire / AC Input Cord (Schuko, UK, Australia plug)
DC Output Connection	Heavy Duty Studs

Size

Dimensions (L x W x H)	11.6" × 8.1" × 3.4" (295mm x 206mm x 86mm)
Net Weight	5.7 lbs. / 2..58 Kg

Regulatory Compliance

Markings	cETLus
Conformance	UL & CSA Standards
EMI/EMC	FCC Part 15 Class B

Terminal Connections



USA / CAN HARDWIRE

Accessories (optional)

Remote Panel	RM1201-00 (For viewing unit status, adjusting settings and connecting the chargers in parallel)
Battery Temperature Sensor	BTS 10K (For battery charging voltage adjustment)

Schematic Drawings

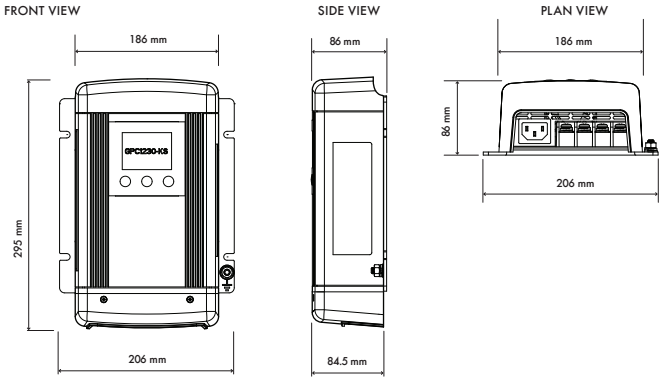

Standard warranty

2 year warranty

This product carries a cETLus safety certification which complies with the Regulatory safety standards for North America.

All specifications subject to change without notice.
Copyright © 2026 Kisae Technology Inc. All Rights Reserved under UCC 1-308 without prejudice.

To learn more about this and other fine Kisae products please contact:

info@kisaetechnology.com

kisaepower.com

Distributor: